MIRCO D-SUB 母直头, 注塑成型式
MIRCO D-SUB, Molded cable

RoHS IP68

技术参数/Technical data

适用温度/Ambient temperature	-20℃ ~ +80℃
胶芯材料/Connector insert	PBT
端子材料/Connector contacts	黄铜镀金/Brass with gold plated
螺丝/螺母材料/Contactor nut/screw	黄铜镀镍/Brass with nickel plated
绝缘阻抗/Insulation resistance	≥1000MΩ
接触阻抗/Contact resistance	≤5mΩ
是否屏蔽/Shielding or not	是/Available
防护等级/IP rating	IP68（锁紧状态/in locked condition）

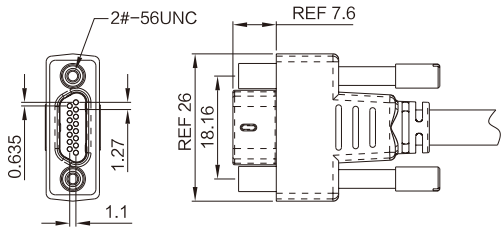

订货信息/Ordering information

芯数/Contacts	额定电流 Rated current	额定电压/Voltage		导体规格/Wire gauge		线材外被 Cable jacket	母头型号/ Female model
		交流(A/C)	直流(A/C)	AWG	mm²		
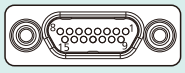 15P	1A	350V	350V	26~28	0.08~0.15	PVC/PUR	D-Z-VE-15P-FA

MIRCO D-SUB 母弯头, 注塑成型式
MIRCO D-SUB, Molded cable, Right angled

RoHS IP67

技术参数/Technical data

适用温度/Ambient temperature	-20℃ ~ +80℃
胶芯材料/Connector insert	PBT
端子材料/Connector contacts	黄铜镀金/Brass with gold plated
螺丝/螺母材料/Contactor nut/screw	黄铜镀镍/Brass with nickel plated
绝缘阻抗/Insulation resistance	≥1000MΩ
接触阻抗/Contact resistance	≤5mΩ
是否屏蔽/Shielding or not	是/Available
防护等级/IP rating	IP67（锁紧状态/in locked condition）

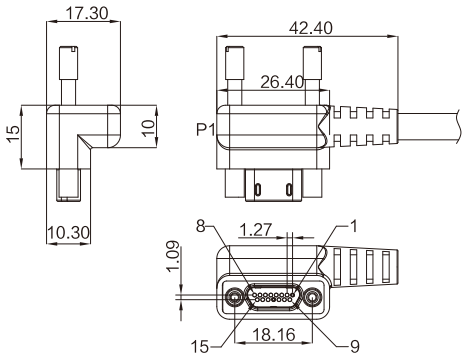

订货信息/Ordering information

芯数/Contacts	额定电流 Rated current	额定电压/Voltage		导体规格/Wire gauge		线材外被 Cable jacket	母头型号/ Female model
		交流(A/C)	直流(A/C)	AWG	mm²		
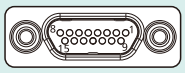 15P	1A	350V	350V	26~28	0.08~0.15	PVC/PUR	D-FR15Z